RELIABILITY REPORT

FOR

MAX1685EEE

PLASTIC ENCAPSULATED DEVICES

April 15, 2003

MAXIM INTEGRATED PRODUCTS

120 SAN GABRIEL DR.

SUNNYVALE, CA 94086

Written by

Jim Pedicord
Quality Assurance
Reliability Lab Manager

Reviewed by

Bryan J. Preeshl
Quality Assurance
Executive Director

Conclusion

The MAX1685 successfully meets the quality and reliability standards required of all Maxim products. In addition, Maxim's continuous reliability monitoring program ensures that all outgoing product will continue to meet Maxim's quality and reliability standards.

Table of Contents

I. .....Device Description
II. .....Manufacturing Information
III. .....Packaging Information
IV. .....Die Information
V. .....Quality Assurance Information
VI. .....Reliability Evaluation
.....Attachments

I. Device Description

A. General

TheMAX1685 is a high-efficiency, internal-switch, PWM step-down switching regulator intended to power cellular phones, communicating PDAs, and handy-terminals. This device delivers a guaranteed 1A output current from two Li-Ion batteries. Its wide input voltage range of 2.7V to 14V gives design flexibility and allows batteries to charge from a wall cube, since the ICs operate at the higher voltages that occur when the battery is removed. The output voltage is preset to 3.3V or can be externally adjusted from 1.25V to V_{IN}.

The low-on-resistance power switch and built-in synchronous rectifier provide high efficiencies of up to 96%. There are four modes of operation: fixed-frequency mode, normal mode, low-power mode, and shutdown mode. The fixed-frequency PWM mode of operation offers excellent noise characteristics. The normal mode maintains high efficiency at all loads. The low-power mode is used to conserve power in standby or when full load is not required. The shutdown mode is used to power down the device for minimal current draw.

The MAX1685 runs at 600kHz to allow use of smaller external components. This device can also be synchronized to an external clock. Other features include a 100% duty cycle for low-dropout applications, an auxiliary 3V/5mA output, and a 1% accurate reference.

B. Absolute Maximum Ratings

Item	Rating
AIN to AGND	0.3 to +15V
IN to PGND	-0.3V to (V_{AIN} + 0.3V)
LX to PGND	-0.5V to (V_{IN} + 0.3V)
PGND to AGND	±0.3V
/SHDN to AGND	-0.3V to (V_{AIN} + 0.3V)
ILIM/SS, FB, CC, BOOT, REF to AGND	-0.3V to (V_{CVL}+ 0.3V)
CVH to IN	-6V to +0.3V
CVL, /STBY, SYNC/PWM to AGND	-0.3V to +6V
Reference Current	1mA
CVL Current	10mA to -1mA
LX Peak Current (Internally Limited)	2.3A
Continuous Power Dissipation (TA = +70°C)	
Operating Temperature Range	-40°C to +85°C
Junction Temperature	+150°C
Storage Temp.	-65°C to +150°C
Lead Temp. (10 sec.)	+300°C
Continuous Power Dissipation (TA = +70°C)	
16 QSOP	667mW
Derates above +70°C	
16 QSOP	8.30mW/°C

II. Manufacturing Information

A. Description/Function:	Low-Noise, 14V Input, 1A PWM Step-Down Converter
B. Process:	S12 ((SG1.2) - Standard 1.2 micron silicon gate CMOS)
C. Number of Device Transistors:	2061
D. Fabrication Location:	Cailfornia or Oregon, USA
E. Assembly Location:	Malyasia, Philippines or Thialand
F. Date of Initial Production:	April, 1999

III. Packaging Information

A. Package Type:	16 Lead QSOP
B. Lead Frame:	Copper
C. Lead Finish:	Solder Plate
D. Die Attach:	Silver-filled Epoxy
E. Bondwire:	Gold (1.3 mil dia.)
F. Mold Material:	Epoxy with silica filler
G. Assembly Diagram:	Buildsheet # 05-1101-0081
H. Flammability Rating:	Class UL94-V0
I. Classification of Moisture Sensitivity per JEDEC standard JESD22-A112:	Level 1

IV. Die Information

A. Dimensions:	86 x 144 mils
B. Passivation:	Si_3N_4/SiO_2 (Silicon nitride/ Silicon dioxide)
C. Interconnect:	TiW/ AlCu/ TiWN
D. Backside Metallization:	None
E. Minimum Metal Width:	1.2 microns (as drawn)
F. Minimum Metal Spacing:	1.2 microns (as drawn)
G. Bondpad Dimensions:	5 mil. Sq.
H. Isolation Dielectric:	SiO_2
I. Die Separation Method:	Wafer Saw

V. Quality Assurance Information

A. Quality Assurance Contacts: Jim Pedicord (Reliability Lab Manager)
Bryan Preeshl (Executive Director)
Kenneth Huening (Vice President)

B. Outgoing Inspection Level: 0.1% for all electrical parameters guaranteed by the Datasheet.
0.1% For all Visual Defects.

C. Observed Outgoing Defect Rate: < 50 ppm

D. Sampling Plan: Mil-Std-105D

VI. Reliability Evaluation

A. Accelerated Life Test

The results of the 135°C biased (static) life test are shown in **Table 1**. Using these results, the Failure Rate (λ) is calculated as follows:

$$\lambda = \frac{1}{MTTF} = \frac{1.83}{192 \times 4389 \times 159 \times 2}$$ (Chi square value for MTTF upper limit)

Temperature Acceleration factor assuming an activation energy of 0.8eV

$\lambda = 6.83 \times 10^{-9}$

λ = 6.83 F.I.T. (60% confidence level @ 25°C)

This low failure rate represents data collected from Maxim's reliability monitor program. In addition to routine production Burn-In, Maxim pulls a sample from every fabrication process three times per week and subjects it to an extended Burn-In prior to shipment to ensure its reliability. The reliability control level for each lot to be shipped as standard product is 59 F.I.T. at a 60% confidence level, which equates to 3 failures in an 80 piece sample. Maxim performs failure analysis on any lot that exceeds this reliability control level. Attached Burn-In Schematic (Spec. # 06-5355) shows the static Burn-In circuit. Maxim also performs quarterly 1000 hour life test monitors. This data is published in the Product Reliability Report (**RR-1M**).

B. Moisture Resistance Tests

Maxim pulls pressure pot samples from every assembly process three times per week. Each lot sample must meet an LTPD = 20 or less before shipment as standard product. Additionally, the industry standard 85°C/85%RH testing is done per generic device/package family once a quarter.

C. E.S.D. and Latch-Up Testing

The PX40-1 die type has been found to have all pins able to withstand a transient pulse of ±1500V, per Mil-Std-883 Method 3015 (reference attached ESD Test Circuit). Latch-Up testing has shown that this device withstands a current of ±250mA.

Table 1
Reliability Evaluation Test Results

MAX1685EEE

TEST ITEM	TEST CONDITION	FAILURE IDENTIFICATION	PACKAGE	SAMPLE SIZE	NUMBER OF FAILURES
Static Life Test (Note 1)					
	Ta = 135°C Biased Time = 192 hrs.	DC Parameters & functionality		77	0
Moisture Testing (Note 2)					
Pressure Pot	Ta = 121°C P = 15 psi. RH= 100% Time = 168hrs.	DC Parameters & functionality	QSOP	77	0
85/85	Ta = 85°C RH = 85% Biased Time = 1000hrs.	DC Parameters & functionality		77	0
Mechanical Stress (Note 2)					
Temperature Cycle	-65°C/150°C 1000 Cycles Method 1010	DC Parameters		77	0

Note 1: Life Test Data may represent plastic DIP qualification lots.
Note 2: Generic Package/Process data

Attachment #1

TABLE II. Pin combination to be tested. 1/ 2/

	Terminal A (Each pin individually connected to terminal A with the other floating)	Terminal B (The common combination of all like-named pins connected to terminal B)
1.	All pins except V_{PS1} 3/	All V_{PS1} pins
2.	All input and output pins	All other input-output pins

1/ Table II is restated in narrative form in 3.4 below.
2/ No connects are not to be tested.
3/ Repeat pin combination I for each named Power supply and for ground

(e.g., where V_{PS1} is V_{DD}, V_{CC}, V_{SS}, V_{BB}, GND, $+V_S$, $-V_S$, V_{REF}, etc).

3.4 Pin combinations to be tested.

a. Each pin individually connected to terminal A with respect to the device ground pin(s) connected to terminal B. All pins except the one being tested and the ground pin(s) shall be open.

b. Each pin individually connected to terminal A with respect to each different set of a combination of all named power supply pins (e.g., V_{SS1}, or V_{SS2} or V_{SS3} or V_{CC1}, or V_{CC2}) connected to terminal B. All pins except the one being tested and the power supply pin or set of pins shall be open.

c. Each input and each output individually connected to terminal A with respect to a combination of all the other input and output pins connected to terminal B. All pins except the input or output pin being tested and the combination of all the other input and output pins shall be open.

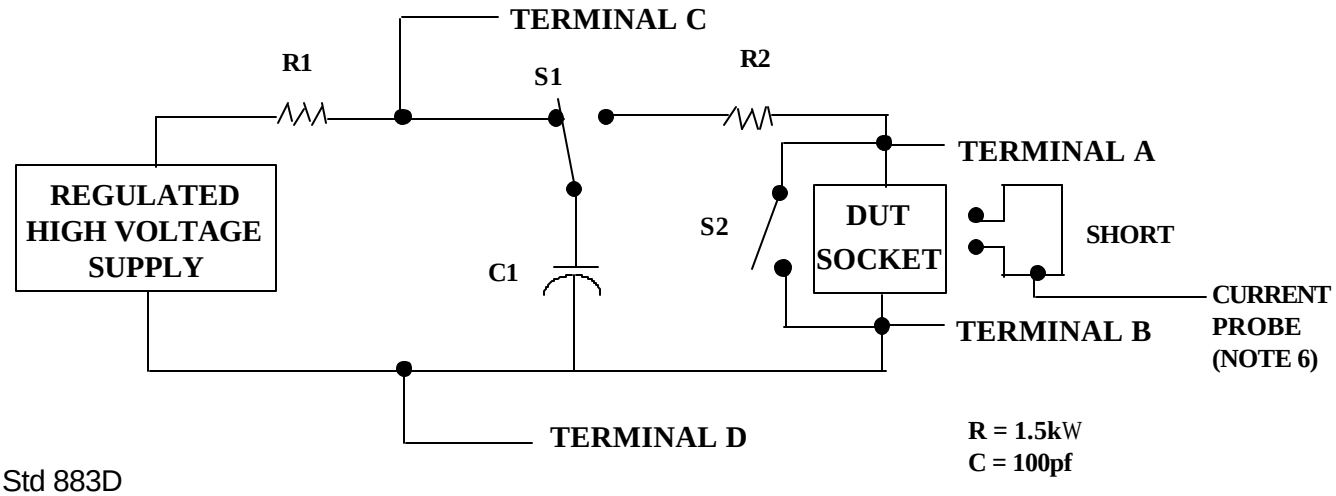

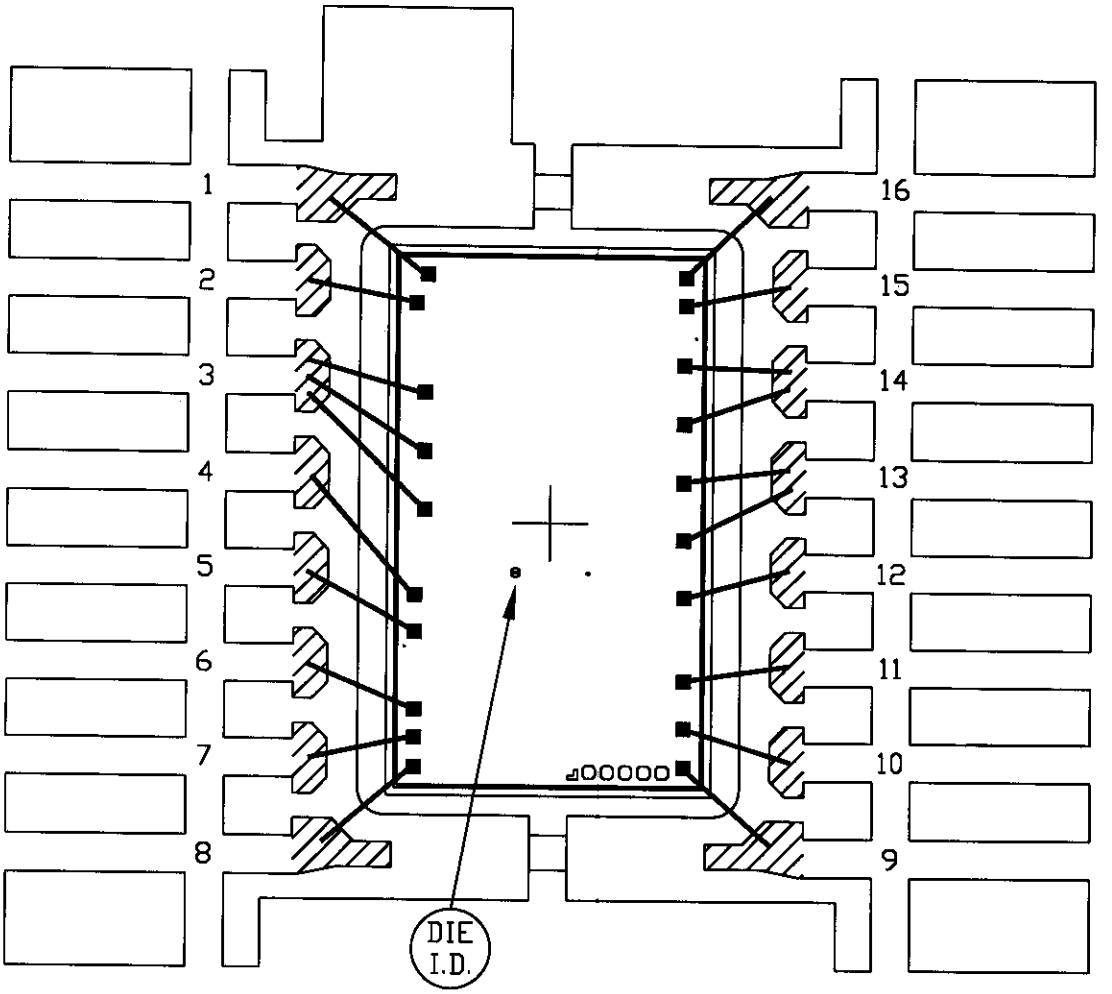

PKG.CODE: E16-5		APPROVALS	DATE	MAXIM
CAV./PAD SIZE: 101×154	PKG. DESIGN			BUILDSHEET NUMBER: 05-1101-0081 / REV.: A

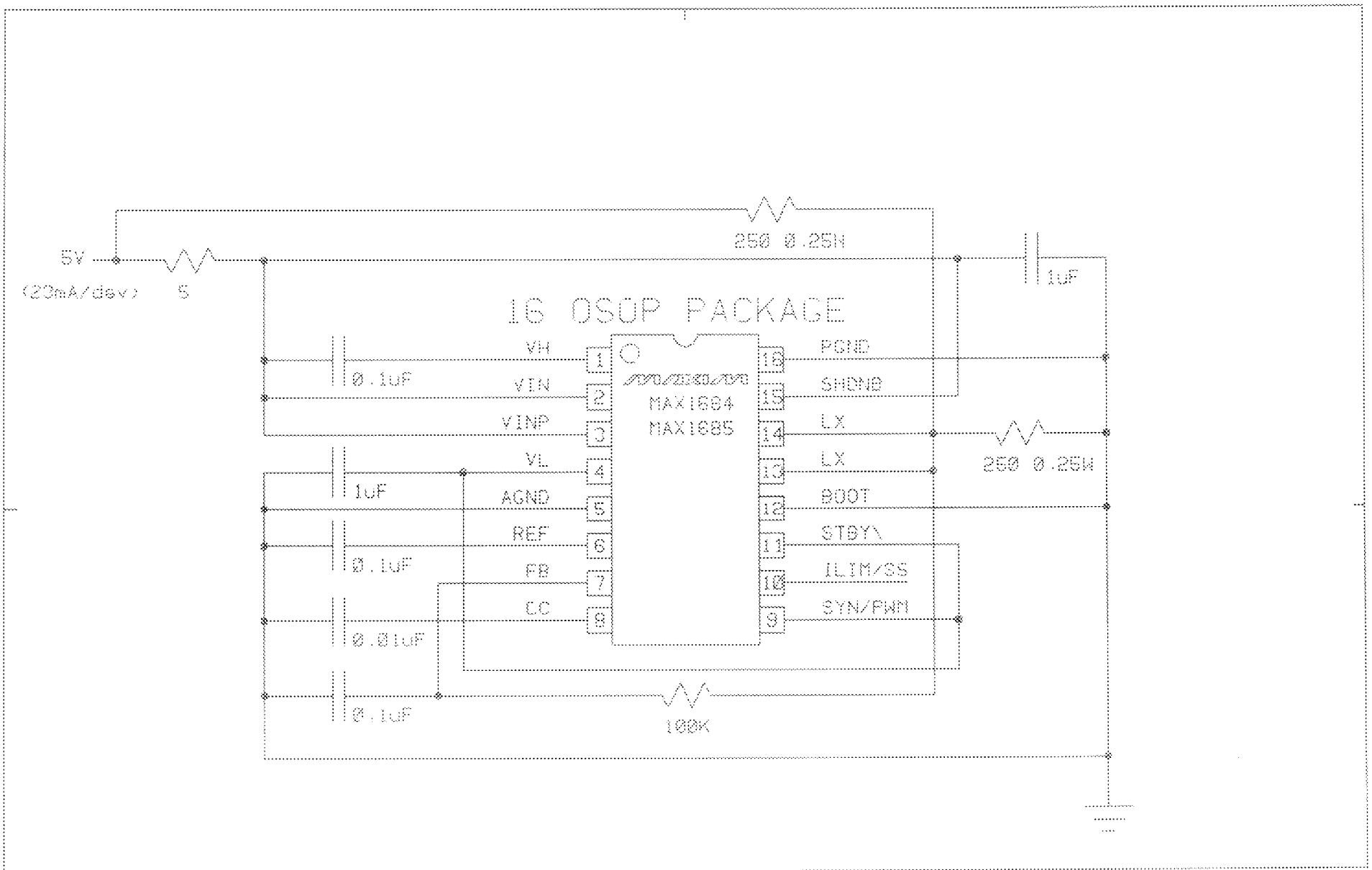

MAXIM	CREATED: 07/16/97	BY: LH	ENG1:	ENG2:
	LAST SAVED: 12:01:20 02-18-99		SIZE A / A REVISION 00/00/00	DWG NO. —
PX40B1	PROJECT: PX40			
	DESC.: PX40 BURN-IN CKT		FILE: PX40B1.DRW	SHEET 1 OF 1