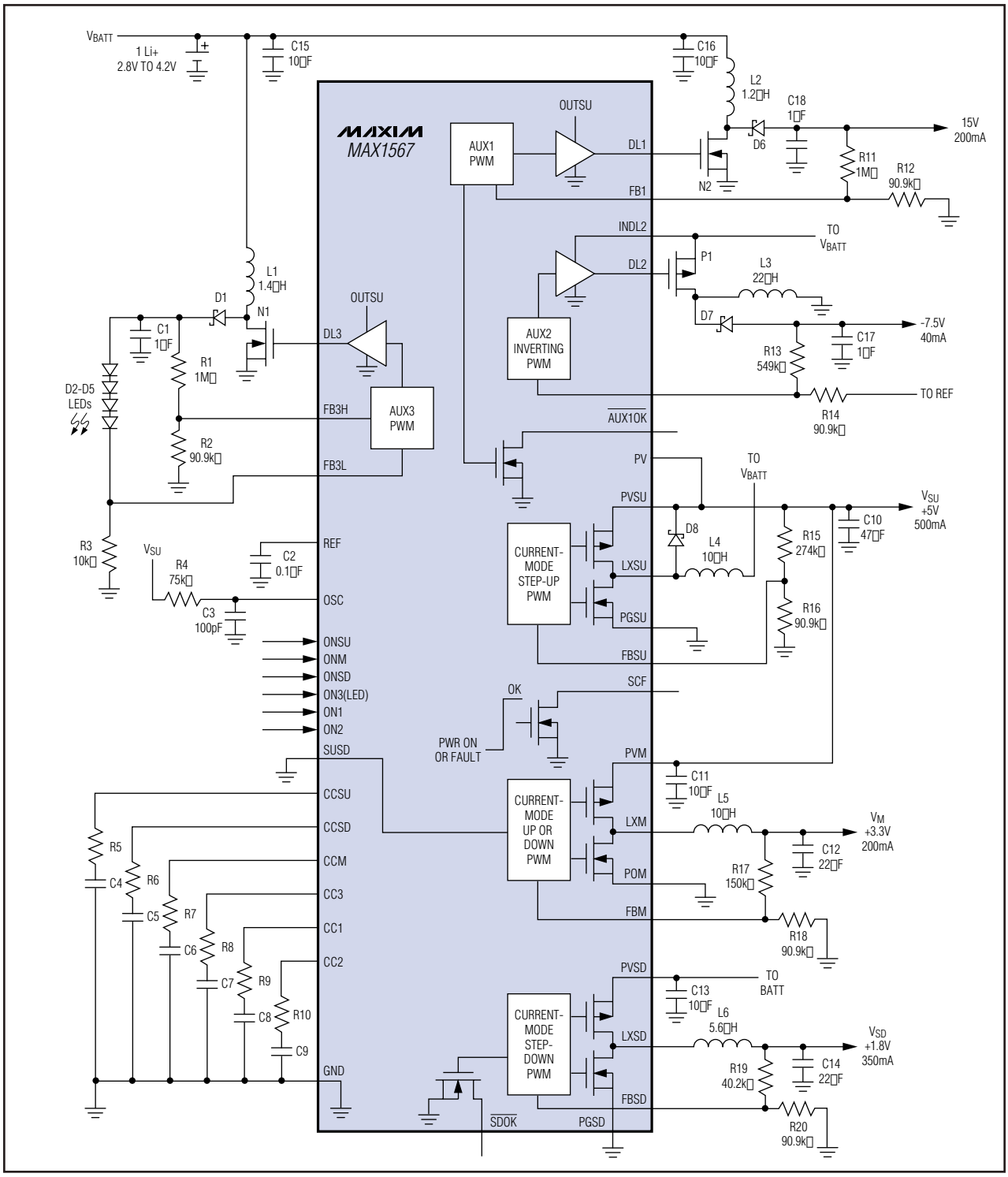
VBATT
1 Li+
2.8V TO 4.2V
C15
10µF
C16
10µF
L2
1.2µH
C18
1µF
D6
15V
200mA
R11
1MΩ
R12
90.9kΩ
N2
MAXIM
MAX1567
AUX1
PWM
OUTSU
DL1
FB1
INDL2
TO
VBATT
P1
DL2
L3
22µH
D7
-7.5V
40mA
C17
1µF
R13
549kΩ
TO REF
R14
90.9kΩ
AUX2
INVERTING
PWM
L1
1.4µH
D1
N1
C1
1µF
R1
1MΩ
D2-D5
LEDs
R2
90.9kΩ
DL3
OUTSU
FB3H
AUX3
PWM
FB3L
AUX10K
PV
TO
VBATT
PVSU
VSU
+5V
500mA
C10
47µF
D8
L4
10µH
R15
274kΩ
R16
90.9kΩ
CURRENT-
MODE
STEP-UP
PWM
LXSU
PGSU
FBSU
R3
10kΩ
VSU
R4
75kΩ
C2
0.1µF
C3
100pF
REF
OSC
ONSU
ONM
ONSD
ON3(LED)
ON1
ON2
SUSD
SCF
OK
PWR ON
OR FAULT
PVM
C11
10µF
L5
10µH
CURRENT-
MODE
UP OR
DOWN
PWM
LXM
POM
FBM
VM
+3.3V
200mA
C12
22µF
R17
150kΩ
R18
90.9kΩ
CCSU
CCSD
CCM
CC3
CC1
CC2
R5
C4
R6
C5
R7
C6
R8
C7
R9
C8
R10
C9
PVSD
C13
10µF
TO
BATT
L6
5.6µH
CURRENT-
MODE
STEP-
DOWN
PWM
LXSD
FBSD
VSD
+1.8V
350mA
R19
40.2kΩ
C14
22µF
R20
90.9kΩ
GND
SDOK
PGSD